HAWKEYE® 1600T

Smart Camera

The HawkEye 1600T series of smart cameras combines a compact form factor with the broad applicability, versatility and proven performance of Visionscape® software. Designed for use in a wide range of applications, the HawkEye 1600T provides a cost-effective, easily deployed solution for manufacturers to monitor quality, control processes, or identify and trace parts on production lines.

HawkEye 1600T: At a Glance

- *Processes Up To 3600 Parts Per Minute*
- *Compatible With Microscan Visionscape*
- *Flexible C-Mount Optics*
- *Direct Connect Lighting Options*

HawkEye 1610TIS: VGA resolution, with Intellifind

HawkEye 1610TS: VGA resolution, no Intellifind

HawkEye 1610TIH: XGA resolution, with Intellifind

HawkEye 1610TH: XGA resolution, no Intellifind

For more information on this product, visit www.microscan.com.

Flexible Configuration

The HawkEye 1600T cameras feature C-mount optics and separate lighting, with built-in digital I/O, serial communications, and Ethernet networking. All processing is done on-board using a high performance, embedded CPU.

Visionscape and Intellifind

Integrated Visionscape software offers powerful processing for image transformation and analysis, including high-level tools for character verification (OCR and OCV), and reading and verifying a wide range of barcodes. The optional Intellifind tool provides robust object finding and pattern recognition.

Rugged Design

With a cast alloy IP67 enclosure and M12 connectors, the HawkEye 1600T is an ideal choice for the toughest industrial applications.

Application Examples

- Assembly verification (automotive, medical devices, packaging)
- Print quality inspection (pharmaceutical, other)
- Package quality inspection (food and beverage)
- Component presence/ absence checking (electronics)
- Part location (robotics, machine builder)
- Part identification (automotive, electronics, packaging)

HawkEye 1600T: Capabilities

Linear Barcodes

2D Symbols

OCR/OCV ABC123

- Image processing
- Image analysis & feature extraction
- Flaw detection
- Object location
- Dimensional measurements
- Custom processing options

Shape Inspection

Pattern Comparison

Object Finding

MICROSCAN®

HawkEye® 1600T Specifications and Options

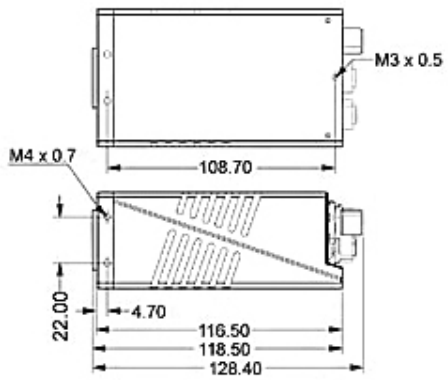

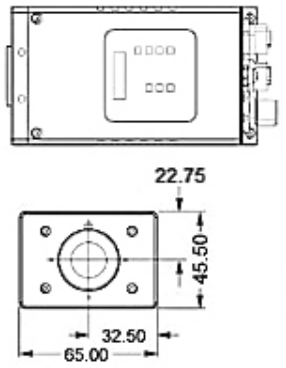

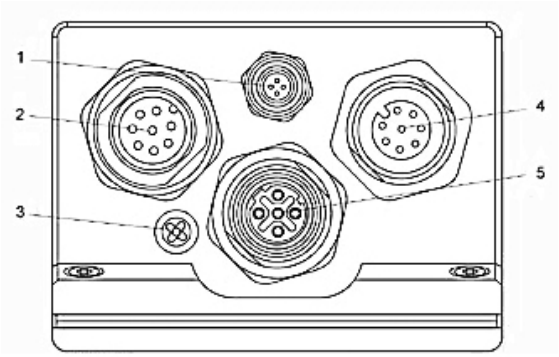

MECHANICAL
Height: 2" (50.8 mm)
Width: 2.25" (57.15 mm)
Depth: 3.89" (98.73 mm)
Weight: 1.70 lbs (0.77 Kg)

LIGHT COLLECTION
Progressive scan, full frame and partial frame
Sensor: 1/3 inch CCD
HE1600TTXS: VGA (640 by 480 pixels)
HE1600TTXH: XGA (1024 by 768 pixels)

COMMUNICATION PROTOCOLS
Interfaces: Ethernet 10/100 MB, supports TCP/IP, DHCP, APIPA and static IP address
Software Flow Control: RS-232

IMAGING RATES
HE1600TTXS: 60 full frame images/second
HE1600TTXH: 30 full frame images/second

ELECTRICAL
Power: 24V at 300 mA (7 W)
Supply Voltage: 20.4 to 28.8 V

INPUTS/OUTPUTS
Trigger input:
Outputs 1–3: 50 mA
Universal I/O 1–4: (Optoisolated) 20 mA at 24 VDC

ENVIRONMENTAL
Operating Temperature: 0° to 50°C (32° to 122°F)
Storage Temperature: -10° to 70°C (-14° to 158°F)
Storage: Up to 95% (non-condensing)

SYMBOLOGY TYPES
2D Symbologies: Data Matrix, PDF417, QR Code
Linear Barcodes: Code 39, Code 93, Code 128, UPC/EAN, UPC-E, UPC Supplementals, I2 of 5, BC412, Codabar, Postnet, Pharmacode, GS1 Databar and Composite

INDICATORS
LEDs: Trigger, Fail, Pass, Mode, Power, Link, Activity

INPUTS/OUTPUTS
LEDs: Trigger, Fail, Pass, Mode, Power, Link, Activity

SAFETY CERTIFICATIONS
FCC, CE

ROHS/WEEE COMPLIANT

ISO CERTIFICATION
Issued by Det Norske Veritas
Cert No. 8446-2007-AQ-USA-ANAB

CONNECTORS

No.	Function
1	Lighting Power and Strobe
2	X1 Power and Primary IO
3	QuicSet
4	Secondary IO and Serial
5	X4 Ethernet

©2008 Microscan Systems, Inc. SP033A 10/08
Performance data is determined using high quality Grade A symbols per ISO/IEC 15415 and ISO/IEC 15416 in a 25°C environment. For application-specific results, testing should be performed with symbols used in the actual application. Microscan Applications Engineering is available to assist with evaluations. Results may vary depending on symbol quality. **Warranty–**One year limited warranty on parts and labor. Extended warranty available.

MICROSCAN®

Microscan Systems, Inc.
Tel 603 598 8400 / 800 468 9503
Fax 603 577 5947
Microscan Europe
Tel 31 172 423360 / Fax 31 172 423366
Microscan Asia Pacific
Tel 65 6846 1214 / Fax 65 6846 4641

www.microscan.com

Product Information: info@microscan.com
Auto ID Support: helpdesk@microscan.com
Vision Support: visionsupport@microscan.com
NERLITE Support: nerlitesupport@microscan.com